915D
Excavator

LIUGONG CONSTRUCTION MACHINERY N.A., LLC
20823 Park Row
Katy, Texas 77449 USA
T: +1 281-579-8882
F: +1 281-579-8388
info@liugongna.com

Engine	Cummins QSB4.5
Gross Power	110 hp (82 kW) @ 2,200 rpm
Net Power	102 hp (76 kW) @ 2,200 rpm
Maximum Digging Depth	19'3" (5867 mm)
Standard Bucket Capacity	0.47 yd^3 (0.36 m^3)
Operating Weight	31,460 lbs (14270 kg)

915D
Excavator

LIUGONG

ENGINE

Tier	Tier III
Make & Model	Cummins QSB4.5
Gross power	110 hp (82 kW) @ 2,200 rpm
Net power	102 hp (76 kW) @ 2,200 rpm
Peak torque	360 ft-lbs (488 N.m) @ 1,500 rpm
Number of cylinders	4
Displacement	274 in^3 (4.5 L)

TRACK DRIVE

Max. travel speed	3.4 mph (5.5 km/h)
Gradeability	70%
Drawbar pull	27,943 lbs (12674 kg)

UNDERCARRIAGE

Shoe width	23.6" (600 mm)
No. of shoes per side	45
No. of upper rollers per side	1
No. of bottom rollers per side	7

HYDRAULIC SYSTEM

Main pumps total flow	63.4 gal/min (240 L/min)
Relief pressure, main	4,627 psi (221 kPa)
Pilot pump flow	5.28 gal/min (20 L/min)

SWING SYSTEM

Swing speed	12.94 rpm

REFERENCE ARM

Arm length	9'6" (2896 mm)
Arm breakout force, normal, SAE	11,802 lbs (5353 kg)

WORKING RANGES

Max dig depth	19'3" (5867 mm)
Reach at ground level	28'2" (8585 mm)
Depth of 8' level bottom	18'7" (5664 mm)
Max dig height	29'8" (9042 mm)
Dump height	22'2" (6756 mm)
Max dig depth of vertical wall	17'2" (5232 mm)

BUCKET PERFORMANCE

Standard bucket heaped capacity	0.47 yd^3 (0.36 m^3)
Min heaped capacity of bucket options	0.47 yd^3 (0.36 m^3)
Max heaped capacity of bucket options	0.95 yd^3 (0.7 m^3)
Bucket breakout force, normal, SAE	16,230 lbs (7362 kg)

OPTIONAL BLADE PERFORMANCE

Blade depth below ground	21.6" (549 mm)
Blade lift above ground	22.2" (564 mm)

SERVICE CAPACITIES

Fuel tank	70.3 gal (266 L)
Engine oil	3.7 gal (14 L)
Cooling system	5.3 gal (20 L)
Hydraulic reservoir	31.7 gal (120 L)
Hydraulic system total	52.8 gal (200 L)

Bucket: SAE 0.47 yd^3 (0.36 m^3) 860 lb (390 kg) Boom: 15.1 ft (4602 mm) Arm: 9.5 ft (2896 mm) Shoes: 23.6" (600 mm) Counter weight: 5,070 lb (2300 kg)

Lift Point Height		5' (1524 mm)		10' (3048 mm)		15' (4572 mm)		20' (6096 mm)		Max. reach		
										Front	Side	
20' (6096 mm)	lb									▯ 5,145	4,096	17'
	kg									▯ 2334	1858	5182 mm
15' (4572 mm)	lb					▯ 5,526	5,119	▯ 5,553	2,958	▯ 4,426	2,668	21'
	kg					▯ 2506	2322	▯ 2519	1342	▯ 2008	1210	6401 mm
10' (3048 mm)	lb			▯ 8,842	▯ 8,842	▯ 6,922	4,779	5,507	2,824	4,292	2,116	23'
	kg			▯ 4011	▯ 4011	▯ 3140	2168	2498	1281	1947	960	7010 mm
5' (1524 mm)	lb			▯ 13,913	8,317	8,595	4,334	5,293	2,632	4,169	2,017	23'
	kg			▯ 6311	3772	3899	1966	2400	1194	1891	915	7010 mm
0	lb	▯ 34,411	31,948	▯ 16,768	7,544	8,176	3,977	5,105	2,462	4,070	1,914	23'
	kg	▯ 15609	14491	▯ 7606	3422	3709	1804	2316	1117	1846	868	7010 mm
-5' (-1524 mm)	lb	▯ 32,094	32,026	▯ 16,772	7,339	7,976	3,802	5,008	2,376	4,639	2,191	21'
	kg	▯ 14558	14526	▯ 7608	3329	3618	1725	2272	1078	2104	994	6401 mm
-10' (-3048 mm)	lb	▯ 26,576	26,576	▯ 14,783	7,429	7,991	3,816			5,765	2,767	18'
	kg	▯ 12055	12055	▯ 6705	3370	3534	1603			2615	1255	5486 mm
-15' (-4572 mm)	lb			▯ 9,911	7,804					▯ 8,223	5,937	12'
	kg			▯ 4496	3540					▯ 3730	2693	3658 mm

1. ▯ Indicates the load is limited by hydraulic capacity rather than tipping capacity.
2. The above rated loads are in compliance with ISO 10567 hydraulic excavator lift capacity rating standard. They do not exceed 87% of hydraulic lifting capacity or 75% tipping load.
3. Ratings at bucket lift hook.

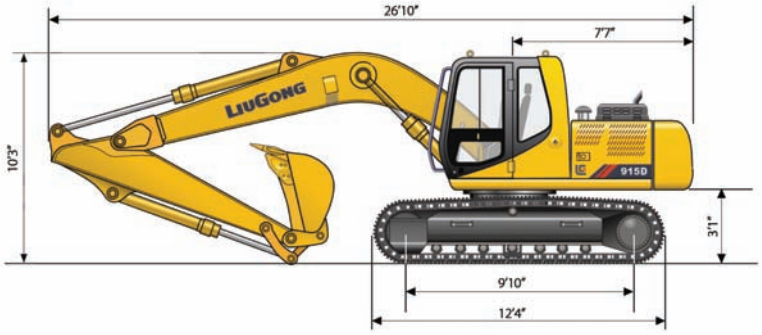

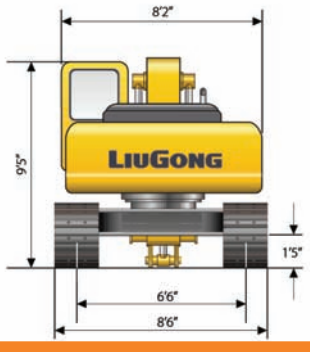

*Specifications and designs are subject to change without notice.
Machines shown may include optional equipment.

LIUGONG CONSTRUCTION MACHINERY N.A., LLC
20823 Park Row
Katy, Texas 77449 USA
T: +1 281-579-8882
F: +1 281-579-8388
info@liugongna.com
www.liugongna.com